74LVTH16244

LOW VOLTAGE BICMOS 16 BIT BUS BUFFER WITH BUS HOLD AND POWER UP 3-STATE

- HIGH SPEED:
  t_{PD} = 3.2ns (MAX.) at T_A = 85°C V_{CC} = 3.0V
- LOW POWER DISSIPATION HIGH LEVEL OUTPUT: I_{CC} = 190µA (MAX.) at T_A = 85°C
- OUTPUT IMPEDANCE:
  $|I_{OH}|$ = 32mA, I_{OL} = 64mA (MIN at V_{CC} = 3.0V)
  $|I_{OH}|$ = 8mA, I_{OL} = 24mA (MIN at V_{CC} = 2.7V)
- BALANCED PROPAGATION DELAYS:
  $t_{PLH} \cong t_{PHL}$
- POWER DOWN PROTECTION ON INPUTS AND OUTPUTS
- COMPATIBLE WITH TTL OUTPUTS:
  V_{IH} = 2V (MIN),V_{IL} = 0.8V(MAX) at
  V_{CC} = 2.7 to 3.6V
- POWER-UP/DOWN 3-STATE: I_{OZPU} = 100µA MAX at V_{CC} = 0V to 1.5V, V_{CC} = 1.5V to 0V, T_A = 85°C
- BUS HOLD PROVIDED ON DATA INPUTS
- OPERATING VOLTAGE RANGE:
  V_{CC}(OPR) = 2.7V to 3.6V
- PIN AND FUNCTION COMPATIBLE WITH 74 SERIES H16244
- LATCH-UP PERFORMANCE EXCEEDS 500mA (JESD 17)



TSSOP

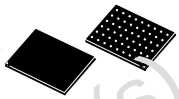

TFBGA

ORDER CODES

PACKAGE	T & R
TSSOP48	74LVTH16244TTR
TFBGA54	74LVTH16244LBR

DESCRIPTION

The 74LVTH16244 is a low voltage BiCMOS 16 BIT BUS BUFFER (NON-INVERTED) fabricated with sub-micron silicon gate and five-layer metal wiring BiCMOS technology. It is ideal and full specified for hot-insertion and high speed 3.3V applications; the power-up/down 3-state circuitry places the outputs in the high impedance state during power-up/down, which prevents driver conflict. This function is guaranteed when V_{CC} is between 0 and 1.5V. It can be interfaced to 3.3V signal environment for both inputs and outputs. Any $\overline{nG}$ output control governs four BUS BUFFERS. Output Enable input ($\overline{nG}$) tied together gives full 16-bit operation. When $\overline{nG}$ is LOW, the outputs are on. When $\overline{nG}$ is HIGH, the output are in high impedance state effectively isolated. Bus hold on data inputs is provided in order to eliminate the need for external pull-up or pull-down resistors.
All inputs and outputs are equipped with protection circuits against static discharge, giving them ESD immunity and transient excess voltage.

LOGIC DIAGRAM

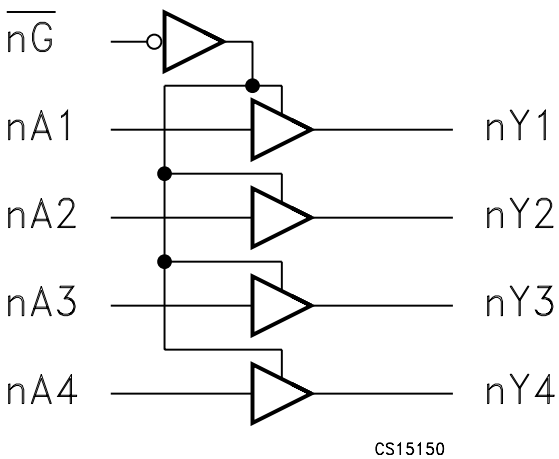

Obsolete Product(s) - Obsolete Product(s)

INPUT AND OUTPUT EQUIVALENT CIRCUIT

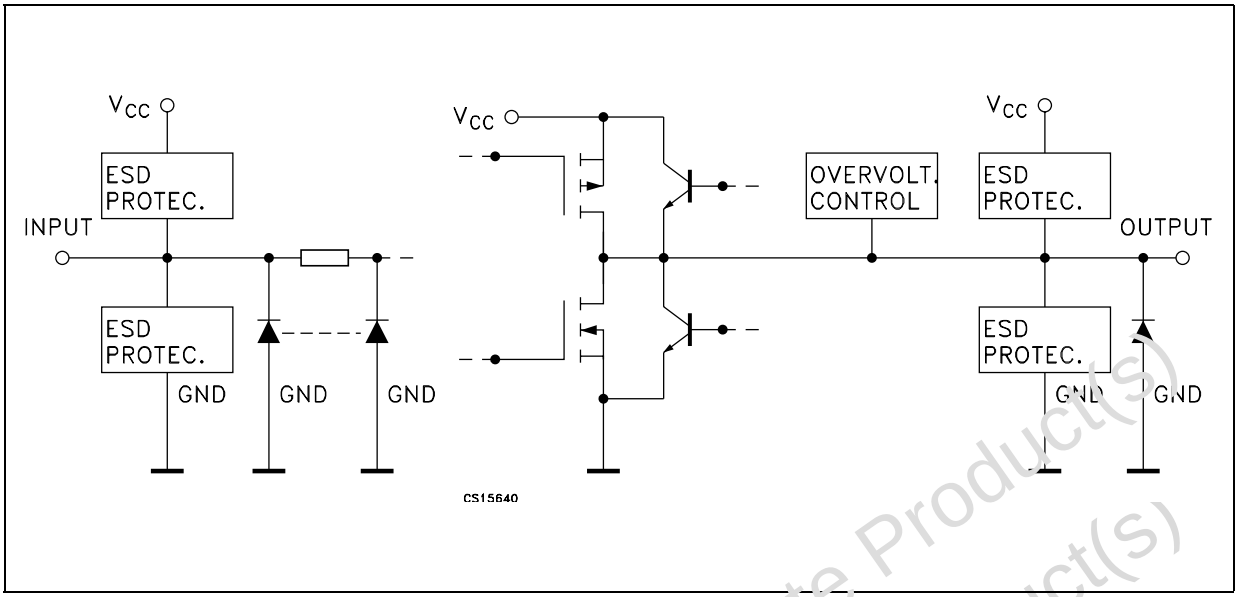

PIN DESCRIPTION

TFBGA PIN N°	TSSOP PIN N°	SYMBOL	NAME AND FUNCTION
A3, J3	1, 24	$\overline{1G}$, $\overline{4G}$	Output Enable Inputs
A6, B5, B6, C5, C6, D5, D6, E5, E6, F5, F6, G5, G6, H5, H6, J6	47, 46, 44, 43, 41, 40, 38, 37, 36, 35, 33, 32, 30, 29, 27, 26	1A1-4,2A1-4 3A1-4, 4A1-4	Data Inputs
A1, B2, B1, C2, C1, D2, D1, E2, E1, F2, F1, G2, G1, H2, H1, J1	2, 3, 5, 6, 8, 9, 11, 12, 13, 14, 16, 17, 19, 20, 22, 23	1Y1-4,2Y1-4 3Y1-4, 4Y1-4	Data Outputs
J4, A4	25, 48	$\overline{3G}$, $\overline{2G}$	Output Enable Inputs
D3, D4, E3, E4, F3, F4	4, 10, 15, 21, 28, 34, 39, 45	GND	Ground (0V)
A2, A5, B3, B4, H3, H4, J2, J5	-	NC	No Connected
C4, G4, C3, G3	42, 31, 7, 18	V_{CC}	Positive Supply Voltage

Obsolete Product(s) - Obsolete Product(s)
Obsolete Product(s) - Obsolete Product(s)

PIN CONNECTION (top view for TSSOP, top through view for BGA)

TSSOP

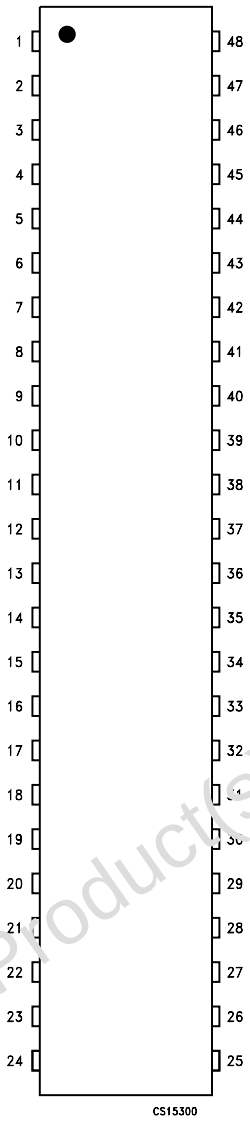

TFBGA

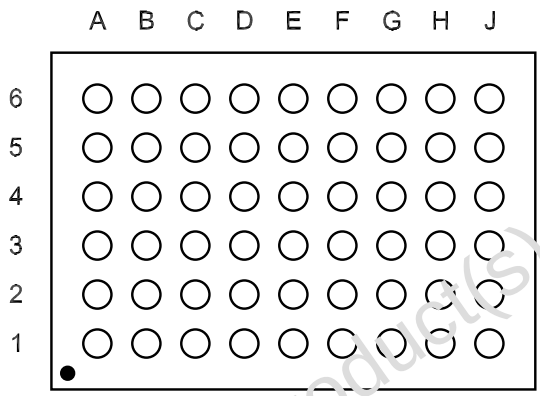

Obsolete Product(s) - Obsolete Product(s)
Obsolete Product(s)

TRUTH TABLE

INPUTS		OUTPUT
$\overline{nG}$	xAn	xYn
L	L	L
L	H	H
H	X	Z

Z = High Impedance; X = Don't care, n = 1..4, x = 1..4

ABSOLUTE MAXIMUM RATINGS

Symbol	Parameter	Value	Unit
V_{CC}	Supply Voltage	-0.5 to +4.6	V
V_I	DC Input Voltage	-0.5 to +4.6	V
V_O	DC Output Voltage (Output disabled)	-0.5 to +4.6	V
V_O	DC Output Voltage	-0.5 to V_{CC} + 0.5	V
I_{IK}	DC Input Diode Current	– 50	mA
I_{OK}	DC Output Diode Current	– 50	mA
I_O	DC Output Current low state	128	mA
I_O	DC Output Current high state	64	mA
I_{CC}	DC V_{CC} or Ground Current	± 100	mA
P_d	Power Dissipation (*)	400	mW
T_{stg}	Storage Temperature	-65 to +150	°C
T_L	Lead Temperature (10 sec)	300	°C

Absolute Maximum Ratings are those values beyond which damage to the device may occur. Functional operation under these conditions is not implied
(*) 500mW: ≅ 65°C derated to 300mW by 10mW/°C: 65°C to 85°C

RECOMMENDED OPERATING CONDITIONS

Symbol	Parameter	Value	Unit
V_{CC}	Supply Voltage	2.7 to 3.6	V
V_I	Input Voltage (An, $\overline{nG}$)	0 to 3.6	V
V_O	Output Voltage	V_{CC}	V
V_O	Output Voltage (Output Disabled)	3.6	V
T_{op}	Operating Temperature	-40 to 85	°C
dt/dV_{CC}	Minimum Power-up ramp rate	200	µs/V
dt/dv	Input Rise and Fall Time (note 1)	0 to 20	ns/V

1) V_I from 0.8V to 2.0V at V_{CC} =2.7V to 3.6V

Obsolete Product(s) - Obsolete Product(s)
Obsolete Product(s) - Obsolete Product(s)

DC SPECIFICATIONS

Symbol	Parameter	Test Condition		Value					Unit
		V_{CC} (V)		T_A = 25 °C			-40 to 85 °C		
				Min.	Typ.	Max.	Min.	Max.	
V_{IK}	Input Voltage Clamp (An, nG)	2.7	I_{IK} = -18mA		-0.85			-1.2	V
V_{IH}	High Level Input Voltage (An, nG)	2.7				2.0		2.0	V
		3.3 (*)				2.0		2.0	
V_{IL}	Low Level Input Voltage (An, nG)	2.7		0.8			0.8		V
		3.3 (*)		0.8			0.8		
I_I	Control Input Leakage Current	3.6	V_I = GND or V_{CC}					± 1	µA
	Data Input Leakage Current	3.6	V_I = GND or V_{CC} $\overline{nG}$ = GND					± 1	µA
$I_{I(HOLD)}$	Data Input Hold Current	3.0	V_I = 0.8V		135		75		µA
		3.0	V_I = 2.0V		-135		-75		
		3.6	V_I = 0 to 3.6V					± 500	µA
V_{OH}	High Level Output Voltage	2.7	I_O = -100 µA				2.5		V
		2.7	I_O = -8 mA				2.4		
		3.0	I_O = -32 mA				2.0		
V_{OL}	Low Level Output Voltage	2.7	I_O = 100 µA					0.2	V
		2.7	I_O = 24 mA					0.5	
		3.0	I_O = 16 mA					0.4	
		3.0	I_O = 32 mA					0.5	
		3.0	I_O = 64 mA					0.55	
I_{OZ}	High Impedance Output Leakage Current	3.6	V_O = 0.5V or 3.0V V_I = V_{IL} or V_{IH} $\overline{nG}$ = V_{CC}					± 5	µA
I_{OZPU}	High Impedance Output Leakage Current	0 to 1.5	V_O = 0.5V or 3.0V V_I = GND or V_{CC} $\overline{nG}$ = GND or V_{CC}					± 100	µA
I_{OZPD}	High Impedance Output Leakage Current	1.5 to 0	V_O = 0.5V or 3.0V V_I = GND or V_{CC} $\overline{nG}$ = GND or V_{CC}					± 100	µA
I_{OFF}	Power Off Leakage Current	0	V_I = GND to 3.6V V_O = GND to 3.6V					± 100	µA
I_{CCA}	Quiescent Supply Current	3.6	V_O = High, I_O = 0					0.19	mA
			V_O = Low, I_O = 0					5.0	
			$\overline{nG}$ = V_{CC}, I_O = 0 V_O = GND or V_{CC}					0.19	
ΔI_{CC}	Maximum Quiescent Supply Current / Input (An or $\overline{nG}$)	3.3 (*)	V_I = V_{CC} - 0.6V An,$\overline{nG}$ = V_{CC} or GND					0.2	mA

(*) Power Supply Range V_{CC} = 3.3±0.3V

Obsolete Product(s) - Obsolete Product(s)

AC ELECTRICAL CHARACTERISTICS

Symbol	Parameter	Test Condition	Value					Unit
			V_{CC} = 2.7V		V_{CC} = 3.3 ± 0.3V			
			Min.	Max.	Min.	Typ.	Max.	
t_{PLH}	Propagation Delay Time An to Yn	T_A = - 40 to 85 °C		3.7	1.2	2.5	3.2	ns
t_{PHL}	Propagation Delay Time An to Yn			3.7	1.2	2.5	3.2	ns
t_{PZL}	Output Enable Time $\overline{nG}$ to Yn			5.0	1.2	2.7	4.0	ns
t_{PZH}	Output Enable Time $\overline{nG}$ to Yn			5.0	1.2	2.7	4.0	ns
t_{PLZ}	Output Disable Time $\overline{nG}$ to Yn			4.4	2.0	3.7	4.2	ns
t_{PHZ}	Output Disable Time $\overline{nG}$ to Yn			5.0	2.2	4.4	5.1	ns
t_{OSLH} t_{OSHL}	Output To Output Skew Time (note1, 2)						0.5	ns

1) Skew is defined as the absolute value of the difference between the actual propagation delay for any two outputs of the same device switching in the same direction, either HIGH or LOW ($t_{OSLH} = |t_{PLHm} - t_{PLHn}|$, $t_{OSHL} = |t_{PHLm} - t_{PHLn}|$
2) Parameter guaranteed by design

CAPACITANCE CHARACTERISTICS

Symbol	Parameter	Test Condition		Value					Unit
		V_{CC} (V)		T_A = 25 °C			-40 to 85 °C		
				Min.	Typ.	Max.	Min.	Max.	
C_I	Control Input Capacitance	open			6				pF
C_O	Output Capacitance	3.3			15				pF

TEST CIRCUIT

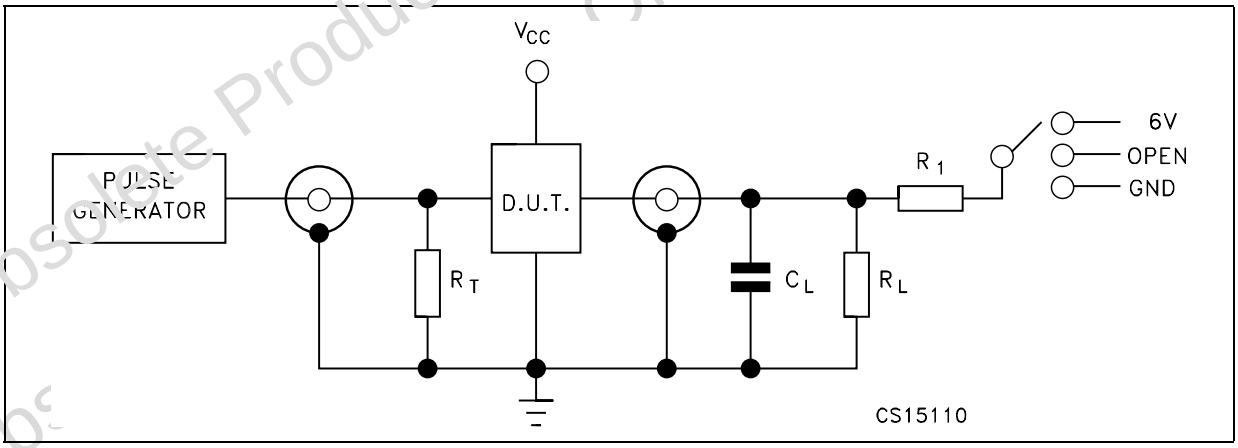

TEST	SWITCH
t_{PLH}, t_{PHL}	Open
t_{PZL}, t_{PLZ} (V_{CC} = 3.0 to 3.6V)	6V
t_{PZL}, t_{PLZ} (V_{CC} = 2.7V)	6V
t_{PZH}, t_{PHZ}	GND

C_L = 50pF or equivalent (includes jig and probe capacitance)
R_L = R_1 = 500Ω or equivalent
R_T = Z_{OUT} of pulse generator (typically 50Ω)

Obsolete Product(s) - Obsolete Product(s)

WAVEFORM SYMBOL VALUE

Symbol	V_{CC}	
	3.0 to 3.6V	**2.7V**
V_{IH}	2.7V	V_{CC}
V_M	1.5V	1.5V
V_X	V_{OL} +0.3V	V_{OL} +0.15V
V_Y	V_{OH} -0.3V	V_{OH} -0.15V

WAVEFORM 1: PROPAGATION DELAY (f=1MHz; 50% duty cycle)

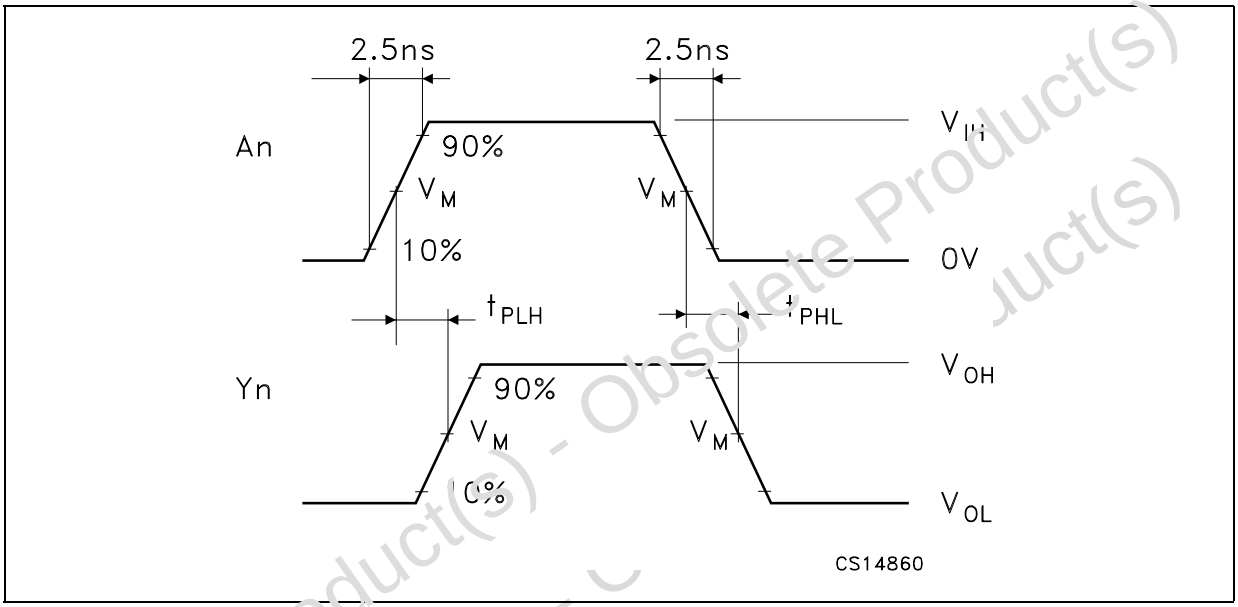

Obsolete Product(s) - Obsolete Product(s)

WAVEFORM 2: OUTPUT ENABLE AND DISABLE TIME (f=1MHz; 50% duty cycle)

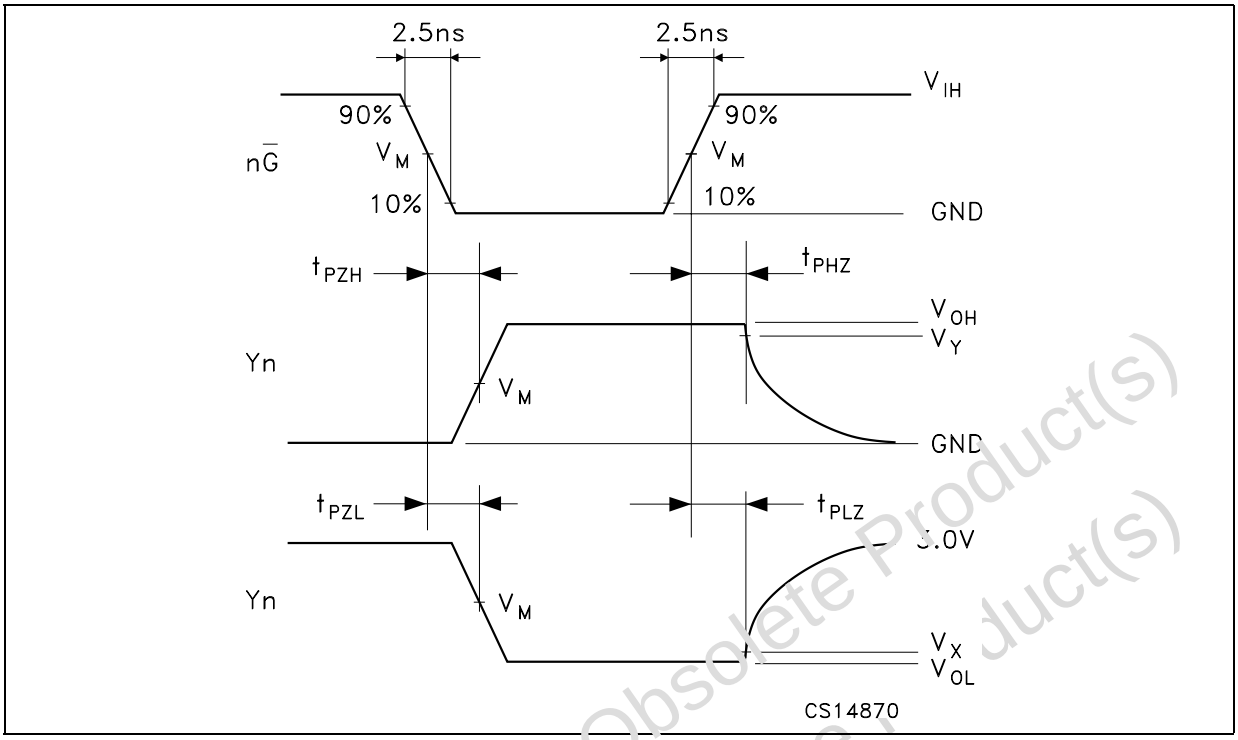

Obsolete Product(s) - Obsolete Product(s)
Obsolete Product(s) - Obsolete Product(s)

TSSOP48 MECHANICAL DATA

DIM.	mm.			inch		
	MIN.	TYP	MAX.	MIN.	TYP.	MAX.
A			1.2			0.047
A1	0.05		0.15	0.002		0.006
A2		0.9			0.035	
b	0.17		0.27	0.0067		0.011
c	0.09		0.20	0.0035		0.0079
D	12.4		12.6	0.488		0.496
E		8.1 BSC			0.318 BSC	
E1	6.0		6.2	0.236		0.244
e		0.5 BSC			0.0197 BSC	
K	0°		8°	0°		8°
L	0.50		0.75	0.020		0.030

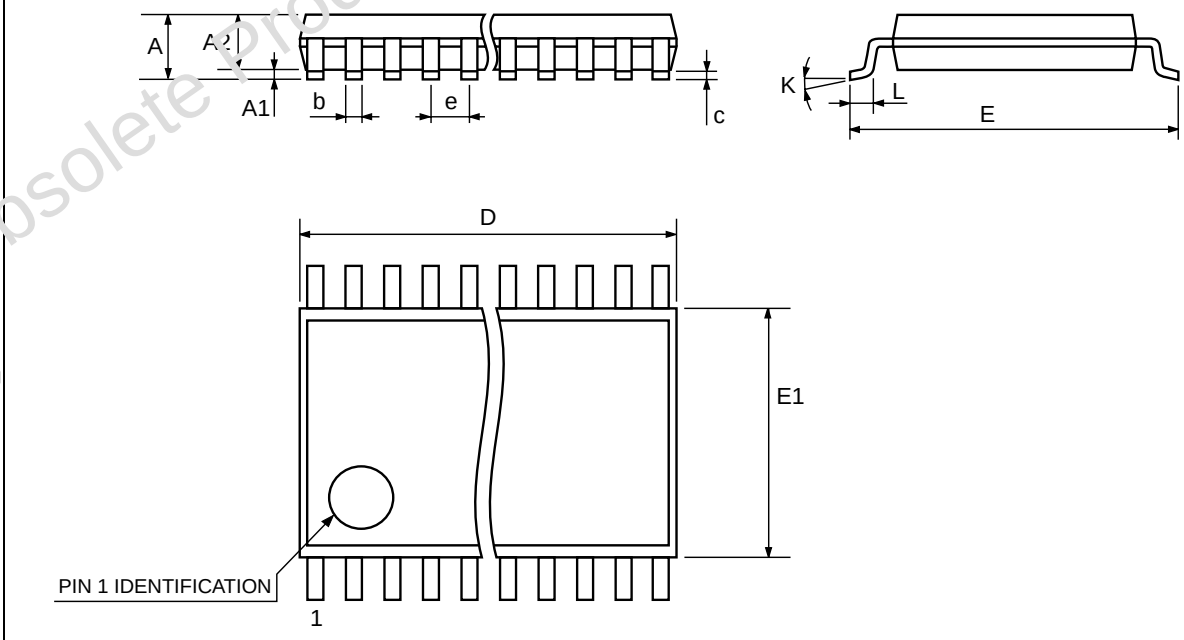

Obsolete Product(s) - Obsolete Product(s)

TFBGA54 MECHANICAL DATA

DIM.	mm.			mils		
	MIN.	TYP	MAX.	MIN.	TYP.	MAX.
A			1.2			47.2
A1	0.25			9.8		
A2	0.78		0.86	30.7		33.8
B	0.35	0.4	0.45	13.7	15.7	17.7
D	7.9		8.1	311.0		318.9
D1		6.4			252.0	
E	5.4	5.5	5.6	212.6	216.5	220.5
E1		4			157.5	
e		0.8			31.5	
SE		0.4			15.7	

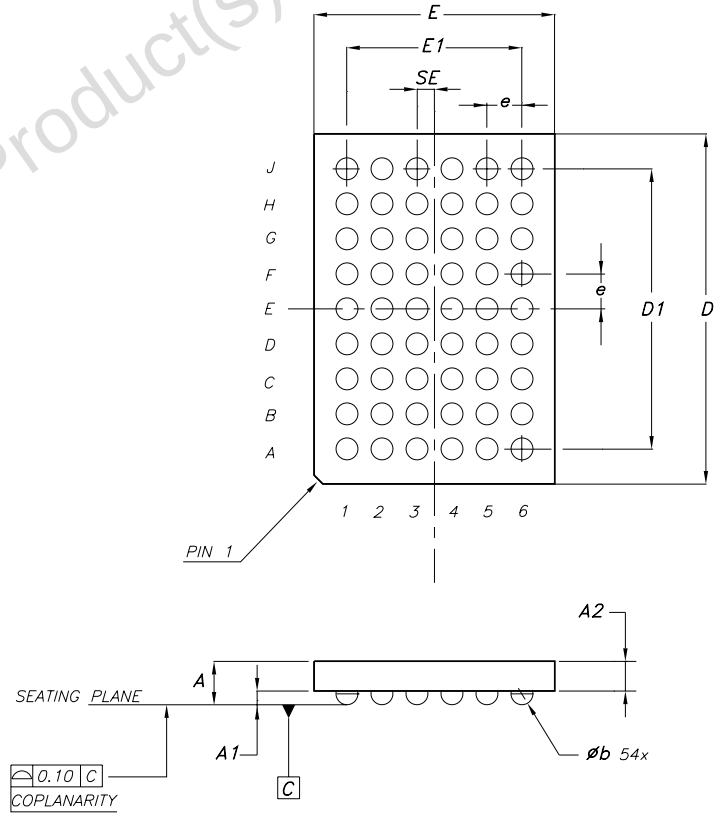

Obsolete Product(s) - Obsolete Product(s)

Tape & Reel TSSOP48 MECHANICAL DATA

DIM.	mm.			inch		
	MIN.	TYP	MAX.	MIN.	TYP.	MAX.
A			330			12.992
C	12.8		13.2	0.504		0.519
D	20.2			0.795		
N	60			2.362		
T			30.4			1.197
Ao	8.7		8.9	0.343		0.350
Bo	13.1		13.3	0.516		0.524
Ko	1.5		1.7	0.059		0.067
Po	3.9		4.1	0.153		0.161
P	11.9		12.1	0.468		0.476

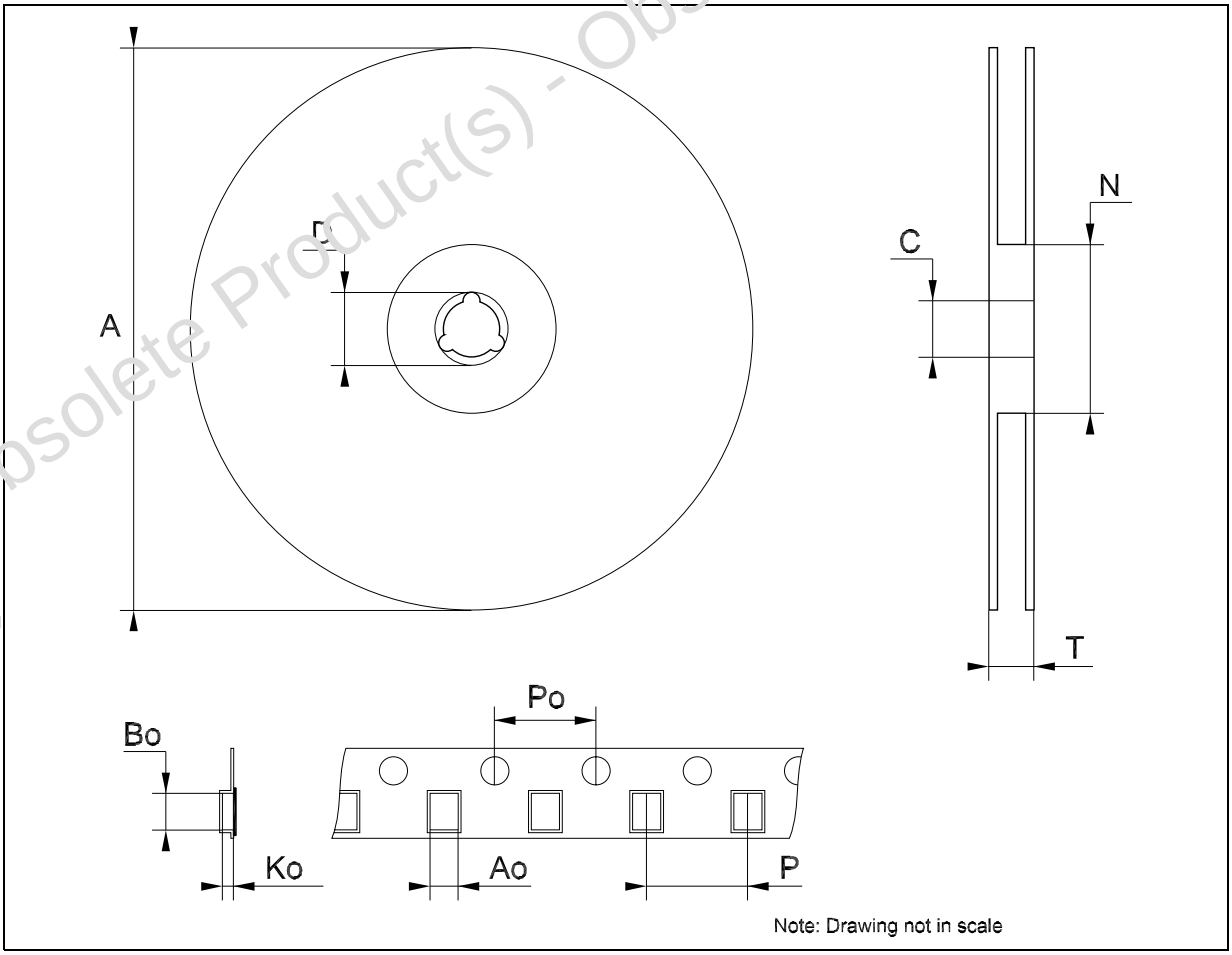

Note: Drawing not in scale

Obsolete Product(s) - Obsolete Product(s)

Tape & Reel TFBGA54 MECHANICAL DATA

DIM.	mm.			inch		
	MIN.	TYP	MAX.	MIN.	TYP.	MAX.
A			330			12.992
C	12.8		13.2	0.504		0.519
D	20.2			0.795		
N	60			2.362		
T			22.4			0.882
Ao		6.1			0.240	
Bo		8.6			0.339	
Ko		1.8			0.071	
Po	3.9		4.1	0.153		0.161
P	7.9		8.1	0.311		0.319

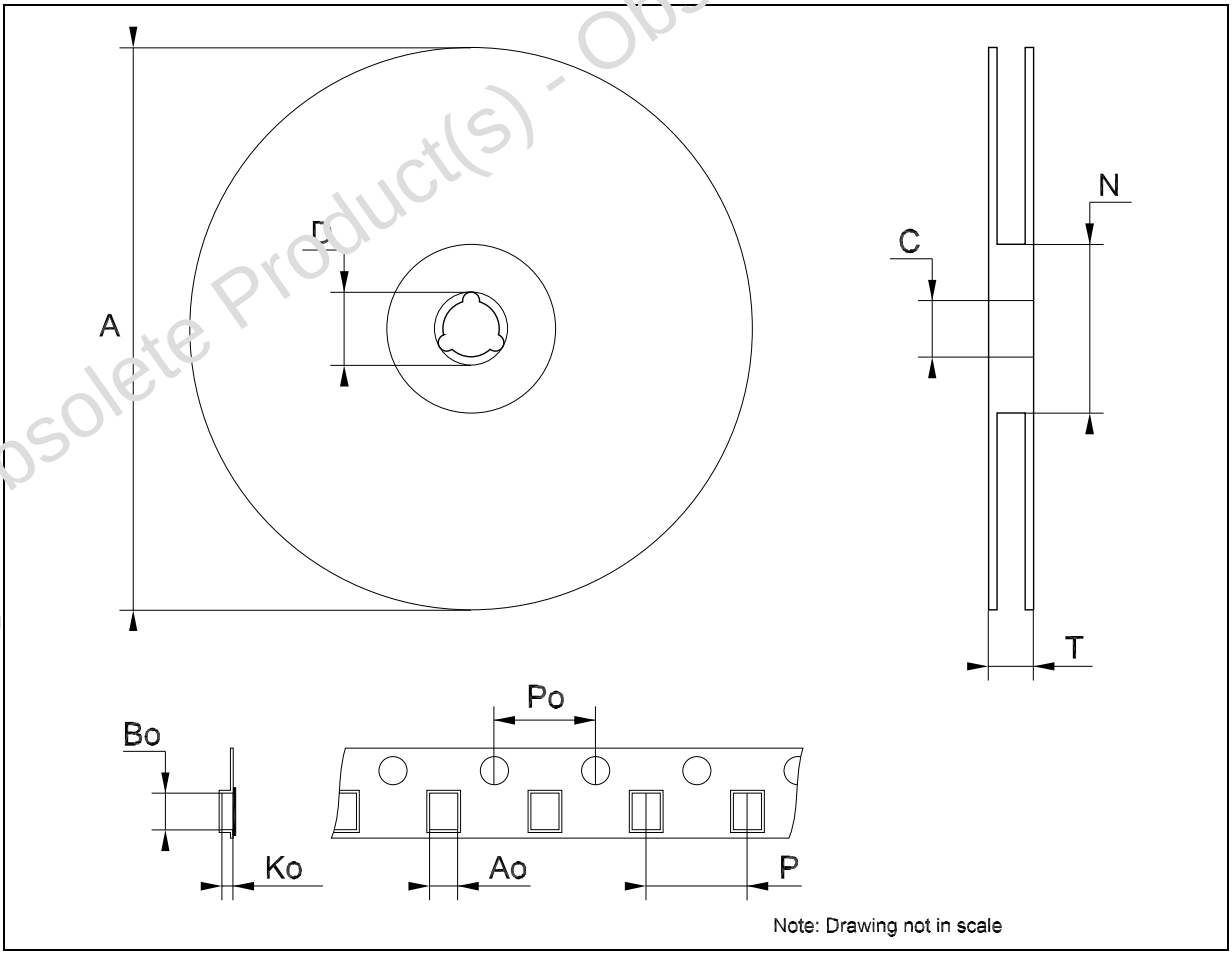

Note: Drawing not in scale

Obsolete Product(s) - Obsolete Product(s)

Obsolete Product(s) - Obsolete Product(s)

Information furnished is believed to be accurate and reliable. However, STMicroelectronics assumes no responsibility for the consequences of use of such information nor for any infringement of patents or other rights of third parties which may result from its use. No license is granted by implication or otherwise under any patent or patent rights of STMicroelectronics. Specifications mentioned in this publication are subject to change without notice. This publication supersedes and replaces all information previously supplied. STMicroelectronics products are not authorized for use as critical components in life support devices or systems without express written approval of STMicroelectronics.

The ST logo is a registered trademark of STMicroelectronics

All other names are the property of their respective owners

© 2004 STMicroelectronics - All Rights Reserved

STMicroelectronics GROUP OF COMPANIES

Australia - Belgium - Brazil - Canada - China - Czech Republic - Finland - France - Germany - Hong Kong - India - Israel - Italy - Japan - Malaysia - Malta - Morocco - Singapore - Spain - Sweden - Switzerland - United Kingdom - United States.

http://www.st.com